LONG SEAMS	
COURSE	ORIENTATION
1	90°

Ship loose items:
NONE

*NOTE: ALL ELEVATIONS ARE PULLED FROM WELD SEAM FOR EASE OF FABRICATION

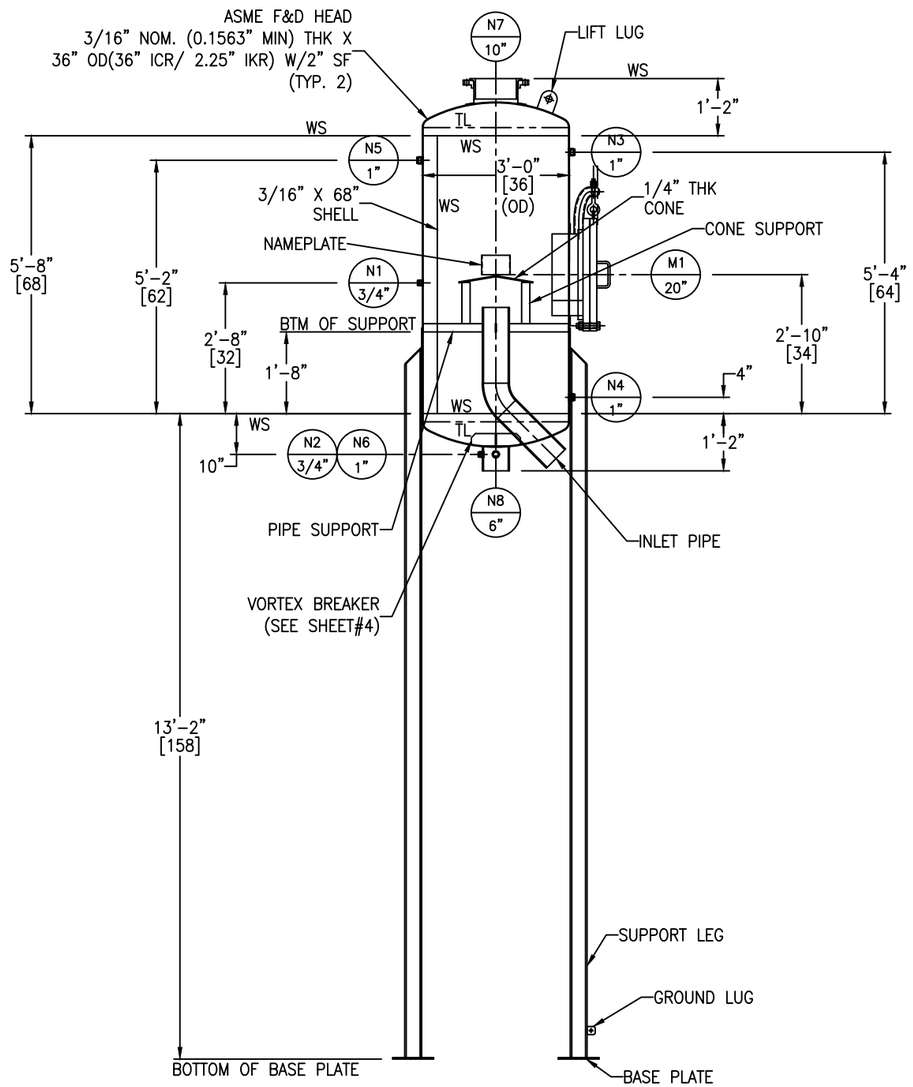

FC-14 GT-11

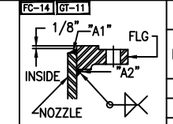

FIGURE NO. 1

FC-14 GT-11

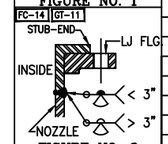

FIGURE NO. 3

FC-14 GT-11

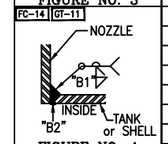

FIGURE NO. 4

FC-14 GT-11

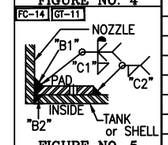

FIGURE NO. 5

FC-14 GT-11

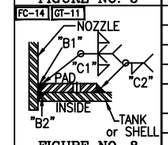

FIGURE NO. 8

FC-14 SA-30

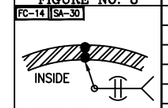

SHELL THK. < 5/16"

FIGURE NO. 9

FC-14 SA-30

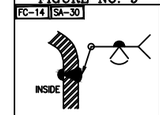

FOR HEADS
FIGURE NO. 11

FC-14 GT-11

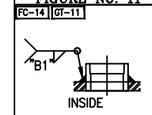

HALF CPLG TO SHELL & PIPE
FIGURE NO. 12

NOZZLE SCHEDULE

MARK	SERVICE	SIZE	RATING	TYPE / STYLE	NECK SCHED.	PROJECTION EXT. (℄)	PROJECTION INT. (MIN.)	WELD FIGURE	REPAD SIZE (WIDTH X THK.)	WELD SIZE "A1"	"A2"	"B1"	"B2"	"C1"	"C2"
N1	SIGHT GLASS CONNECTION	3/4"	3000#	HALF THRD CPLG W/ PLUG	–	–	–	12	–	–	–	3/16	1/8	–	–
N2	SIGHT GLASS CONNECTION	3/4"	3000#	HALF THRD CPLG W/ PLUG	–	–	–	12	–	–	–	3/16	1/8	–	–
N3	INSTRUMENT CONNECTION	1"	3000#	HALF THRD CPLG W/ PLUG	–	–	–	12	–	–	–	3/16	1/8	–	–
N4	INSTRUMENT CONNECTION	1"	3000#	HALF THRD CPLG W/ PLUG	–	–	–	12	–	–	–	3/16	1/8	–	–
N5	INSTRUMENT CONNECTION	1"	3000#	HALF THRD CPLG W/ PLUG	–	–	–	12	–	–	–	3/16	1/8	–	–
N6	INSTRUMENT CONNECTION	1"	3000#	HALF THRD CPLG W/ PLUG	–	–	–	12	–	–	–	3/16	1/8	–	–
N7	VPL OUTLET	10"	150#	LJSE	40S	SEE DWG	–	3,5	2" X 3/16"	–	–	1/4	3/16	3/16	3/16
N8	HB OUTLET	6"	–	PIPE	40S	SEE DWG	–	4	–	–	–	1/4	1/8	–	–
M1	MANWAY	20"	150#	RFSO W/DAVIT	1/4"	6"	1"	1,8	2 1/2" X 3/16"	1/4	3/8	3/16	3/16	3/16	3/16

MATERIALS OF CONSTRUCTION

	VESSEL
SHELL	SA240-304/304L
HEADS	SA240-304/304L
RIM ANGLE	–
NOZZLE NECKS	SA312-304/304L WLD & SA403-304/304L WPB
NOZZLE FLANGES	SA182F-304/304L
MANWAY NECKS	SA240-304/304L
MANWAY FLANGES	SA182F-304/304L
GASKETS	KLINGER TOP CHEM 2003 OR EQUAL
BOLTS/STUDS	SA193-B7 (ZINC PLATED)
NUTS	SA194-2H (ZINC PLATED)
REPADS	SA240-304/304L
COUPLINGS/PLUG	SA182F-304/304L
SUPPORTS/HOLD DOWNS	SA36
LEG BRACE	–
LIFTING LUGS	SA240-304/304L
INTERNAL CONE & SUPPORTS	SA240-304/304L
GROUND LUG	SA240-304/304L
POISON PAD (LEG)	SA240-304/304L
VORTEX BREAKER	SA240-304/304L
TANK CLIPS (LADDER)	–
HANDRAIL	–
HANDRAIL CLIPS	–
PLATFORM	–
PLATFORM CLIPS	–
DIPTUBE SUPPORT	–
JACKET SHELL	–
JACKET HEADS	–
JACKET NOZZLE NECKS	–
JACKET NOZZLE FLANGES	–

DESIGN DATA

	VESSEL
DESIGN AND FAB. CODE	ASME
CERT. STAMP REQ'D.	YES
DESIGN PRESSURE	35 PSIG/FV
DESIGN TEMPERATURE	281° F
MIN. DESIGN METAL TEMP.	-20° F @ 35° PSIG
OPERATING PRESSURE	–
OPERATING TEMPERATURE	–
JOINT EFFICIENCY HEADS	0.70
JOINT EFFICIENCY SHELL	0.70
CORROSION ALLOWANCE	0"
SPECIFIC GRAVITY	1.0
EARTHQUAKE ZONE	Ss = (0.244) S1 = (0.091)
WIND LOAD	104 MPH
STRESS RELIEF	NOT REQ'D
RADIOGRAPHIC EXAM	NOT REQ'D
DYE PENETRANT EXAM	NOT REQ'D
MAGNETIC PARTICLE EXAM	NOT REQ'D
HYDROSTATIC TEST	48 PSIG / GAUGE #17
PNEUMATIC TEST	–
JKT HYDRO TEST	–
JKT DESIGN AND FAB. CODE	–
JKT CERT. STAMP REQ'D.	–
JKT DESIGN PRESSURE	–
JKT DESIGN TEMPERATURE	–
JKT MIN. DESIGN METAL TEMP.	–
JKT OPERATING PRESSURE	–
JKT OPERATING TEMPERATURE	–
JKT JOINT EFFICIENCY HEADS	–
JKT JOINT EFFICIENCY SHELL	–

VESSEL FINISH

INTERIOR WELD TREATMENT:	SAV TANK STANDARD
EXTERIOR WELD TREATMENT:	SAV TANK STANDARD
SAV TANK FINISHING STANDARD:	SEE NOTE 6
INSULATION:	N/A
PAINTING:	SEE NOTE 7

VESSEL CAPACITY AND WEIGHTS

OPERATING CAPACITY	–
FULL CAPACITY	340 GAL.
EMPTY SHIPPING WEIGHT	2,300 LBS.
WEIGHT FULL OF WATER	5,200 LBS.
WEIGHT FULL OF PRODUCT	5,200 LBS.

ASME SECT. VIII, DIV. 1
2023 EDITION

ENG. _____ DATE: _____

Q.C. _____ DATE: _____

A.I. _____ DATE: _____

This drawing is issued for customer approval. please review, make approval changes (if any) in red. check the appropriate box, sign & date.

- ☐ Approval – no changes. Please proceed with fabrication.
- ☐ Approved as noted. Please proceed with fabrication
- ☐ Not approved. Please make changes and resubmit.

Customer signature _____ Date _____

GENERAL NOTES

1.) COVER ALL FLANGES, OPENINGS & MACHINED SURFACES PRIOR TO SHIPMENT UNLESS OTHERWISE NOTED.
2.) BOLT HOLES TO STRADDLE 0° & 180° UNLESS OTHERWISE NOTED.
3.) REPADS TO HAVE (1) ø1/4" NPT TELL-TALE HOLES FOR PNEUMATIC TESTING AT 2 PSIG FOR PRESSURE RETAINING PARTS. ALL OTHER REPADS TO HAVE (1) ø1/4" WEEP HOLE AT LOWEST POINT ON PAD.
4.) ASME CODE VESSELS TO BE IN ACCORDANCE WITH UG-80 & UG-81. TOLERANCES: +/- 1/8" FOR DIMENSIONS AND +/- 2 DEGREES FOR ORIENTATIONS.
5.) ASME MATERIALS TO CONFORM TO THE FOLLOWING: FLANGES – B16.5, FITTINGS – B16.9 & COUPLINGS – B16.11.
6.) PICKLE ALL EXTERIOR WELDS. PASSIVATE INTERIOR & EXTERIOR OF VESSEL.
7.) SUPPORT LEG TO BE PAINTED 1 COAT MACROPOXY 646 (5-7 MILS) HAZE GRAY.

REVISIONS

REV	D.BY	C.BY	DATE	DESCRIPTION
				AS BUILT
2	AD	–	3/10/25	CERTIFIED
1	RS	AD	2/28/25	APPROVAL REV 1
0	AD	RS	2/4/25	APPROVAL

Savannah Tank & Equipment Corp.
1517 Telfair Road, Savannah, GA 31415
(912) 233-8902

DRAWN BY: AD
CHK'D BY: RS
APPROVED BY: NP
SCALE: 1/2" = 1'-0"

ANDRITZ
#1 LIQUOR FLASH TANK
EQUIP. #
CUST. PO #4504524626

DRAWING NO.: 023-25-1 SHT 1 OF 5 REV. SET 2

LONG SEAMS	
COURSE	ORIENTATION
1	90°

Ship loose items:
NONE

INTERNAL CONE AND SUPPORTS NOT SHOWN FOR CLARITY PURPOSE
SEE SHEET 3 FOR INTERNAL PIPE SUPPORT DETAIL

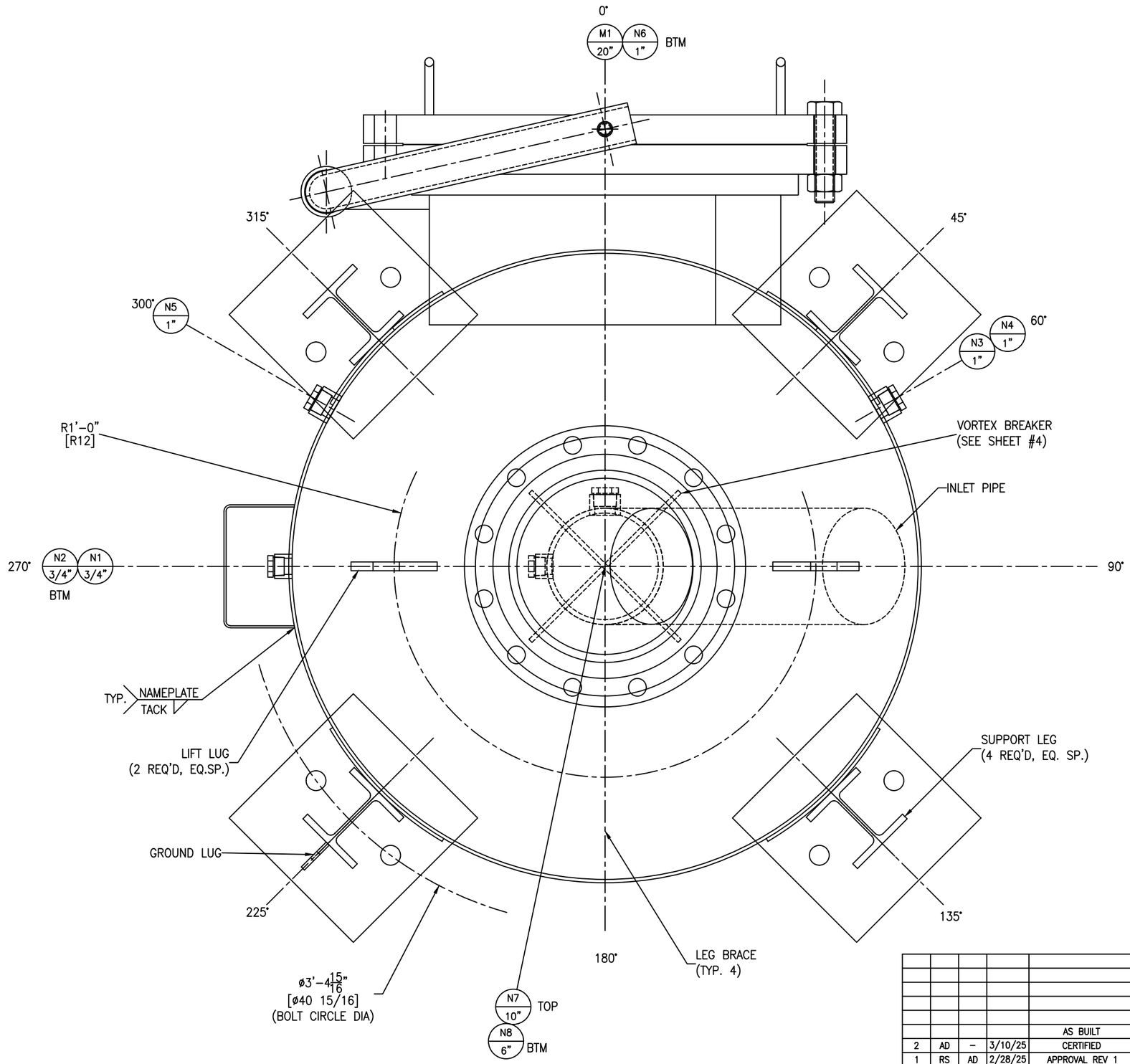

REV	D.BY	C.BY	DATE	DESCRIPTION
				AS BUILT
2	AD	–	3/10/25	CERTIFIED
1	RS	AD	2/28/25	APPROVAL REV 1
0	AD	RS	2/4/25	APPROVAL

⚠ REVISIONS

Savannah Tank & Equipment Corp.
1517 Telfair Road, Savannah, GA 31415
(912) 233-8902

DRAWN BY: AD
CHK'D BY: RS
APPROVED BY: NP
SCALE: 3" = 1'-0"

ANDRITZ
#1 LIQUOR FLASH TANK
EQUIP. #
CUST. PO #4504524626

DRAWING NO.: 023-25-2 SHT 2 OF 5 REV. SET 2

FC-14

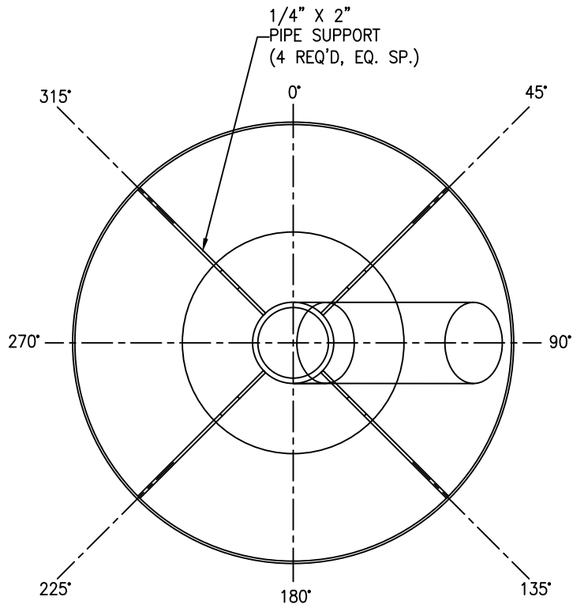

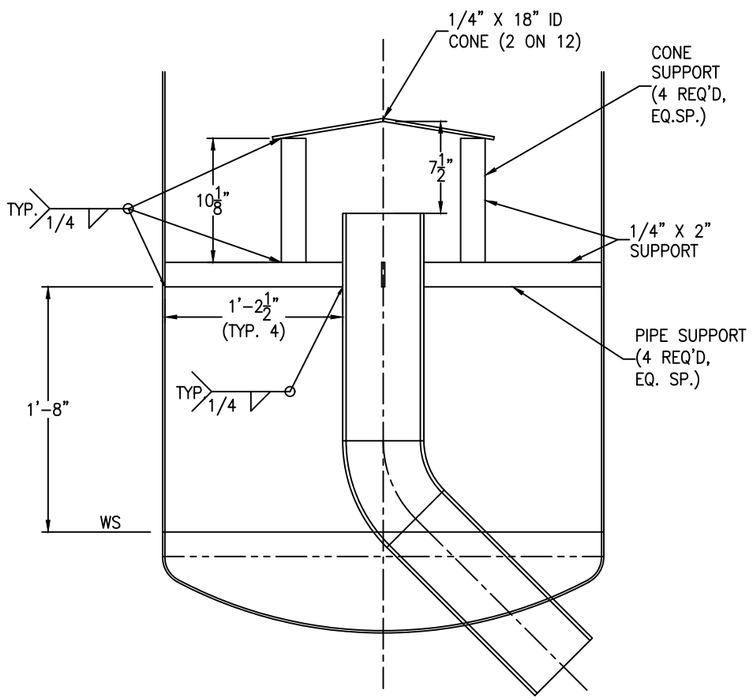

INTERNAL PIPE SUPPORT DETAIL

SCALE: 1 1/2" = 1'-0"

FC-14

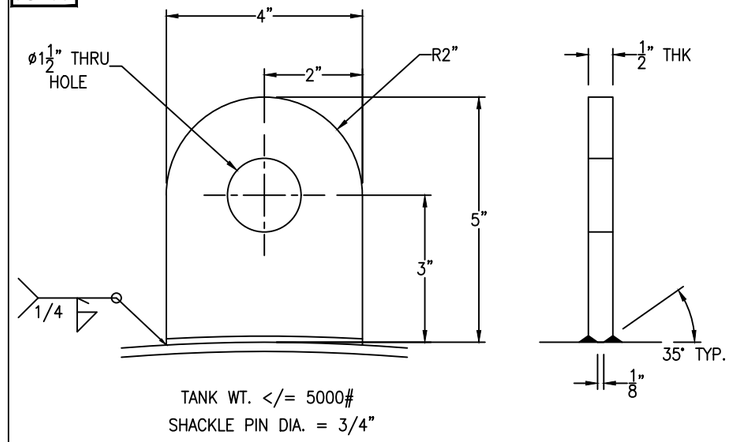

LIFT LUG DETAIL

(2 REQ'D) SCALE: 6" = 1'-0"

FC-39

NOTE: DO NOT PAINT GROUND LUG.

GROUND LUG IS LOCATED @ 225°

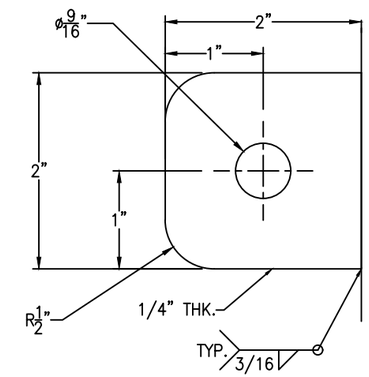

GROUND LUG DETAIL

(1 REQ'D) SCALE: 1'-0" = 1'-0"

FC-14

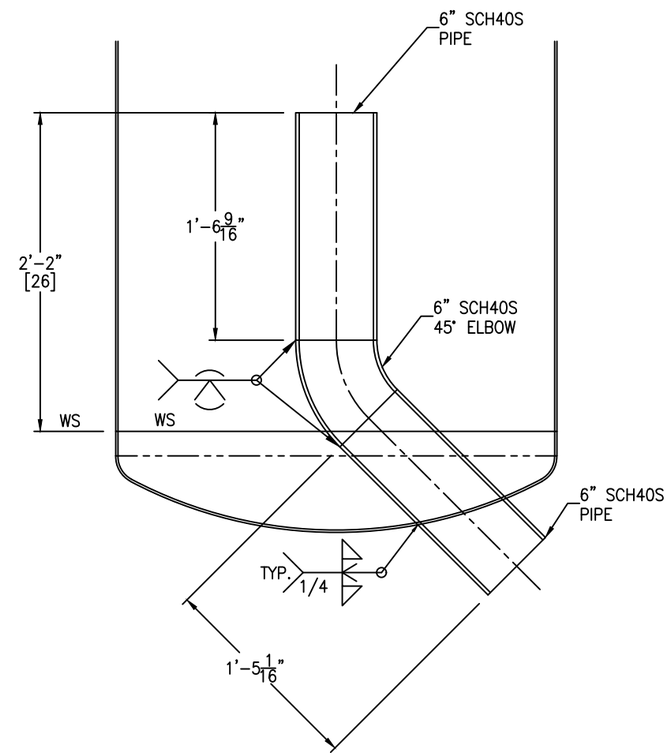

INTERNAL PIPE DETAIL

SCALE: 1 1/2" = 1'-0"

*SEE SHEET #4 FOR VORTEX BREAKER.

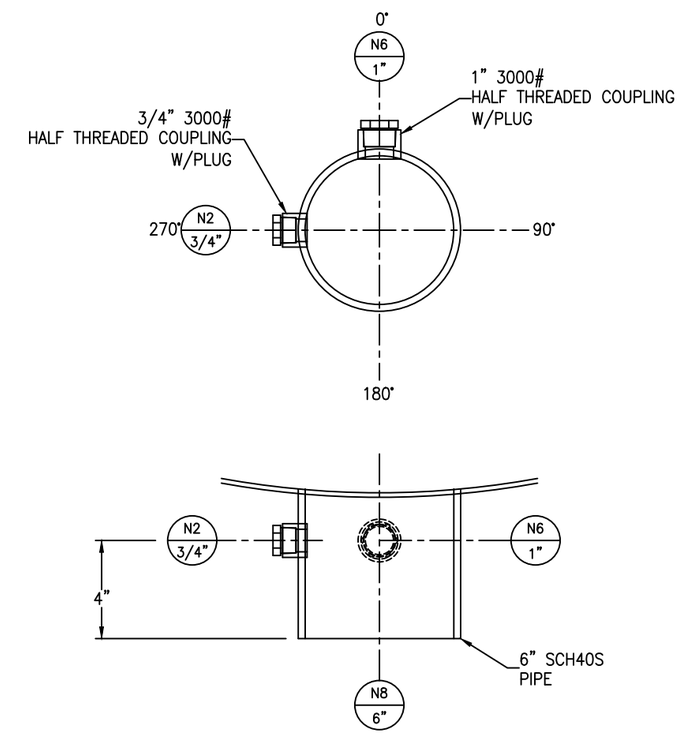

NOZZLE N8 DETAIL

SCALE: 3" = 1'-0"

REV	D.BY	C.BY	DATE	DESCRIPTION
				AS BUILT
2	AD	–	3/10/25	CERTIFIED
1	RS	AD	2/28/25	APPROVAL REV 1
0	AD	RS	2/4/25	APPROVAL

⚠ REVISIONS

Savannah Tank & Equipment Corp.
1517 Telfair Road, Savannah, GA 31415
(912) 233-8902

DRAWN BY: AD
CHK'D BY: RS
APPROVED BY: NP
SCALE: 1/2" = 1'-0"

ANDRITZ
#1 LIQUOR FLASH TANK
EQUIP. #
CUST. PO #4504524626

DRAWING NO.: 023-25-3 SHT 3 OF 5 REV. SET 2

FC-38 FC-39

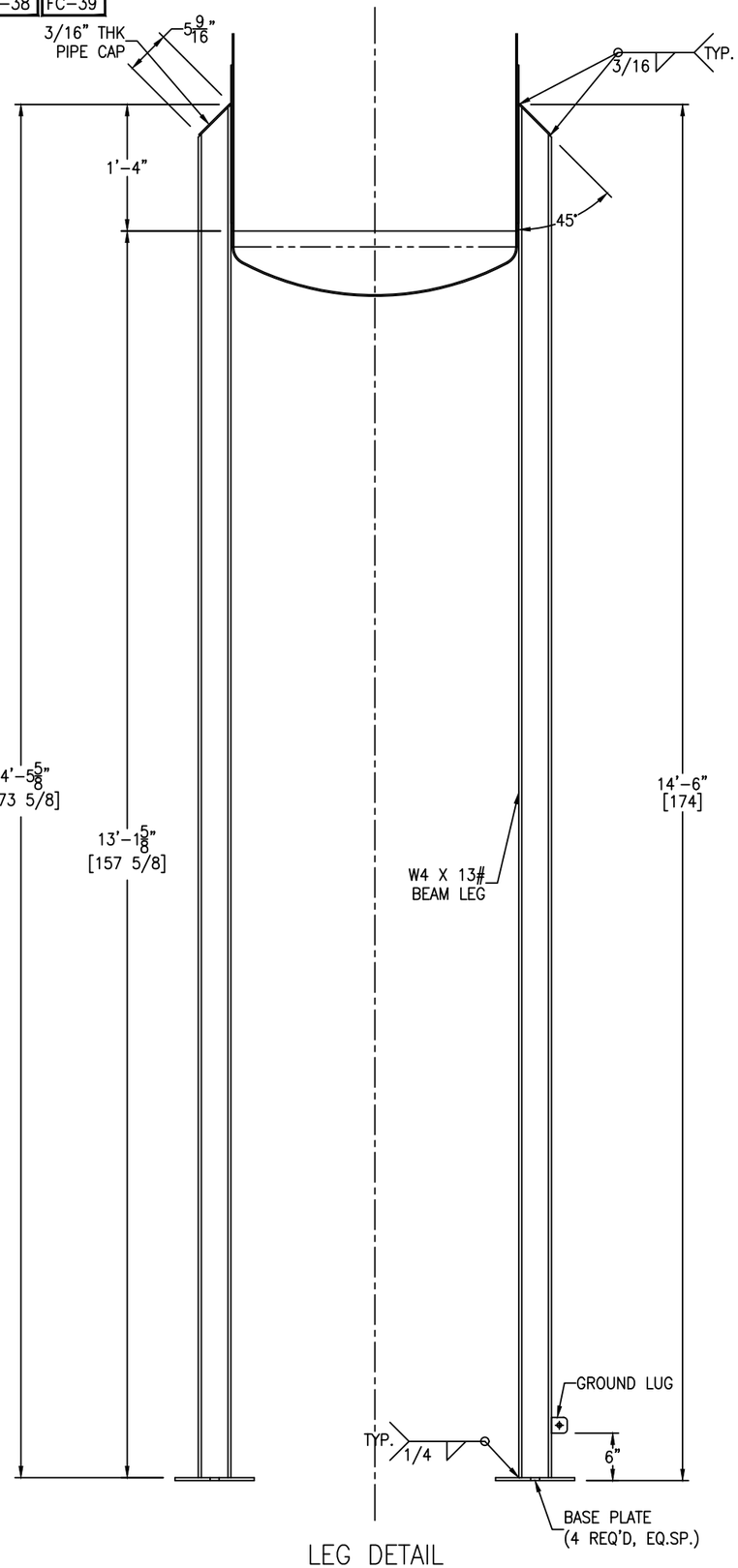

LEG DETAIL

SCALE: 1" = 1'-0"

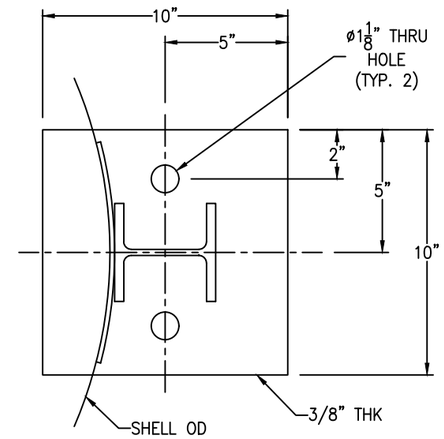

BASE PLATE DETAIL

(4 REQ'D) SCALE: 3" = 1'-0"

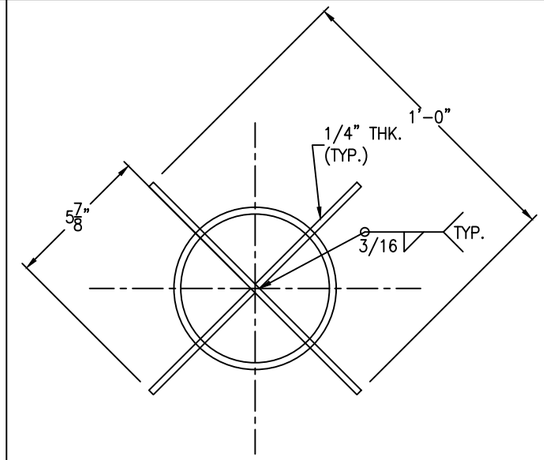

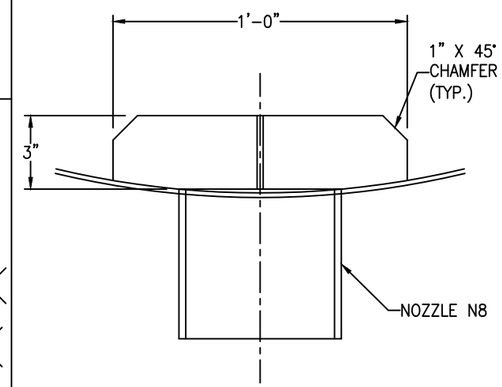

VORTEX BREAKER DETAIL

SCALE: 3" = 1'-0"

FC-14

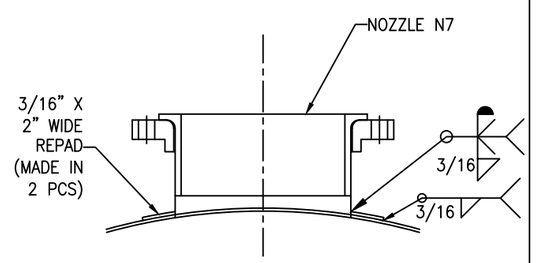

NOZ. N7 REPAD DETAIL

SCALE: 3" = 1'-0"

FC-14

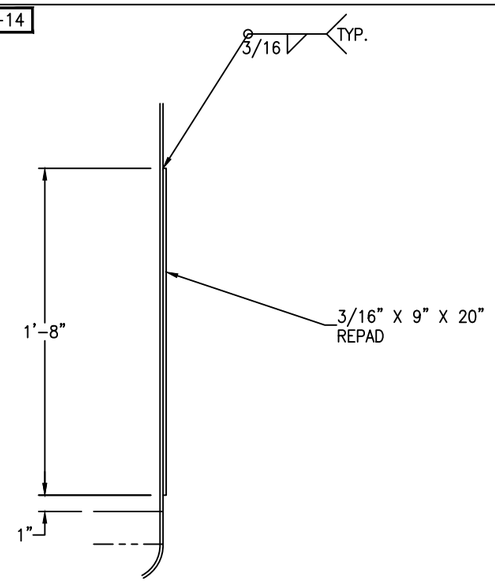

LEG REPAD DETAIL

(4 REQ'D) SCALE: 2" = 1'-0"

REV	D.BY	C.BY	DATE	DESCRIPTION
				AS BUILT
2	AD	–	3/10/25	CERTIFIED
1	RS	AD	2/28/25	APPROVAL REV 1
0	AD	RS	2/4/25	APPROVAL

REVISIONS

Savannah Tank & Equipment Corp.
1517 Telfair Road, Savannah, GA 31415
(912) 233-8902

DRAWN BY: AD
CHK'D BY: RS
APPROVED BY: NP
SCALE: 1/2" = 1'-0"

ANDRITZ
#1 LIQUOR FLASH TANK
EQUIP. #
CUST. PO #4504524626

DRAWING NO.: 023-25-4 SHT 4 OF 5 REV. SET 2

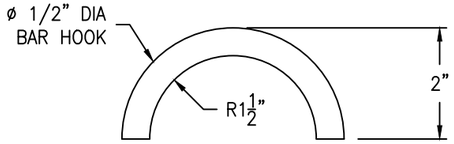

HOOK DETAIL

(1 REQ'D) SCALE: 6" = 1'-0"

FC-14

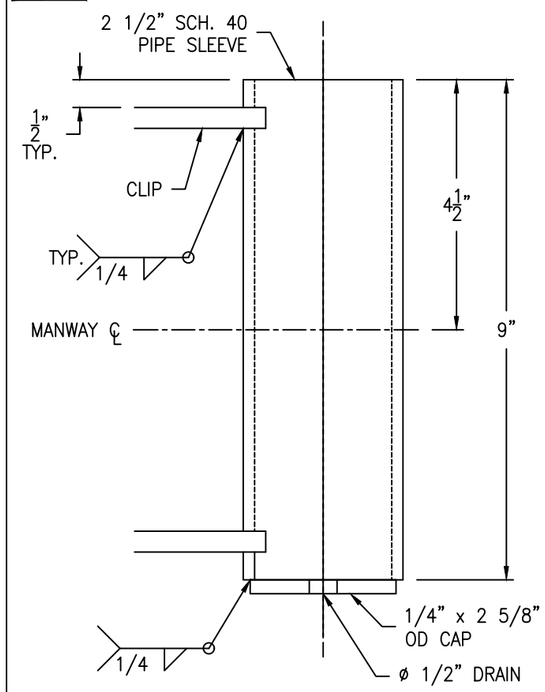

SLEEVE DETAIL

(1 REQ'D) SCALE: 6" = 1'-0"

FC-14

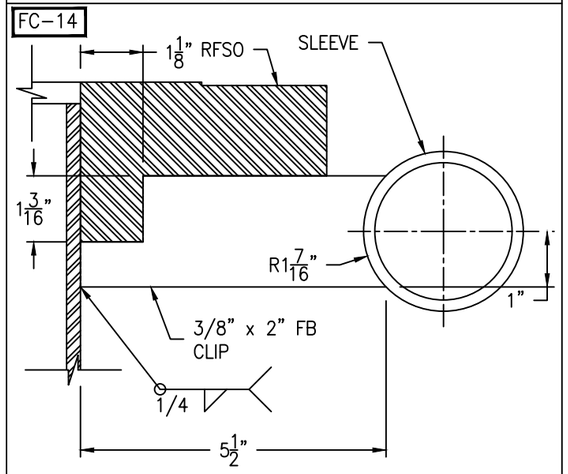

CLIP DETAIL

(2 REQ'D) SCALE: 6" = 1'-0"

FC-14

Bolting for blind
(20) 1 1/8-7 NC x 5" BOLT
(20) 1 1/8-7 NC HH NUT
(1) 20" 150# RING GASKET x 1/8"

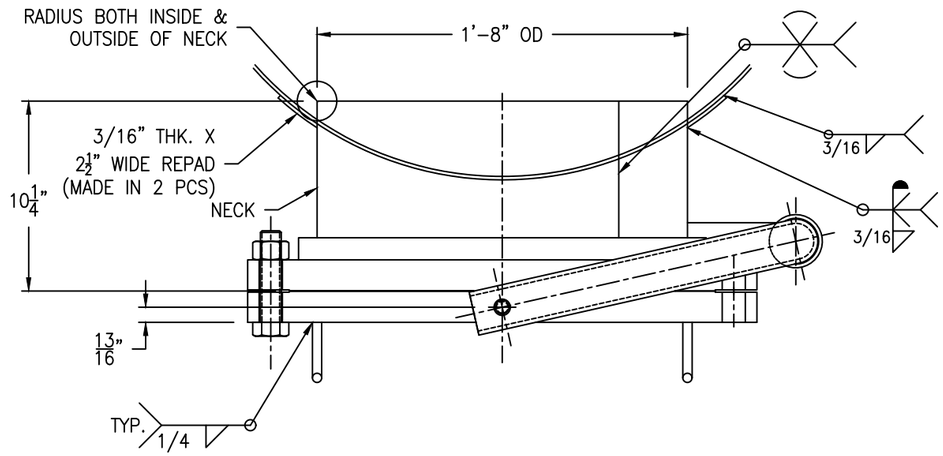

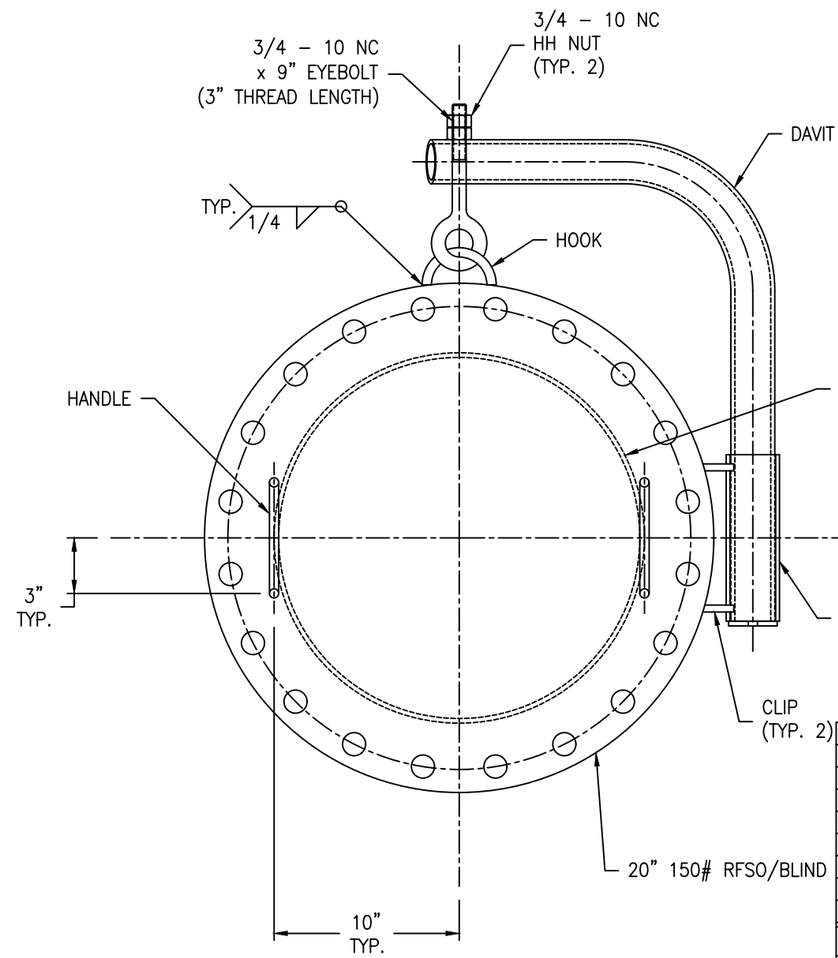

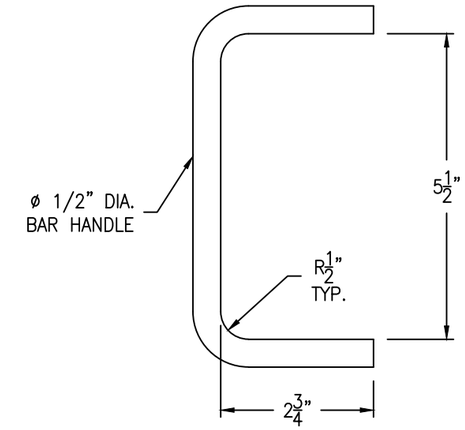

HANDLE DETAIL

(2 REQ'D) SCALE: 6" = 1'-0"

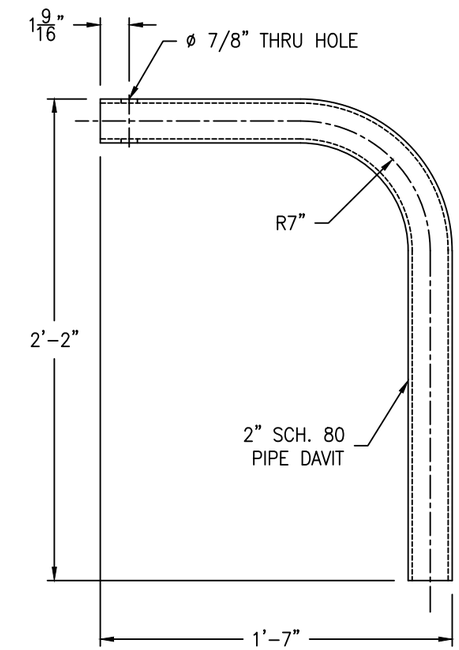

DAVIT ARM DETAIL

(1 REQ'D) SCALE: 2" = 1'-0"

REV	D.BY	C.BY	DATE	DESCRIPTION
				AS BUILT
2	AD	–	3/10/25	CERTIFIED
1	RS	AD	2/28/25	APPROVAL REV 1
0	AD	RS	2/4/25	APPROVAL

1 REVISIONS

Savannah Tank & Equipment Corp.
1517 Telfair Road, Savannah, GA 31415
(912) 233-8902

DRAWN BY: AD
CHK'D BY: RS
APPROVED BY: NP
SCALE: 1/2" = 1'-0"

ANDRITZ
#1 LIQUOR FLASH TANK
EQUIP. #
CUST. PO #4504524626

DRAWING NO.: 023-25-5 SHT 5 OF 5 REV. SET 2